Dishwasher

Instruction Manual

WQP6-3208-US

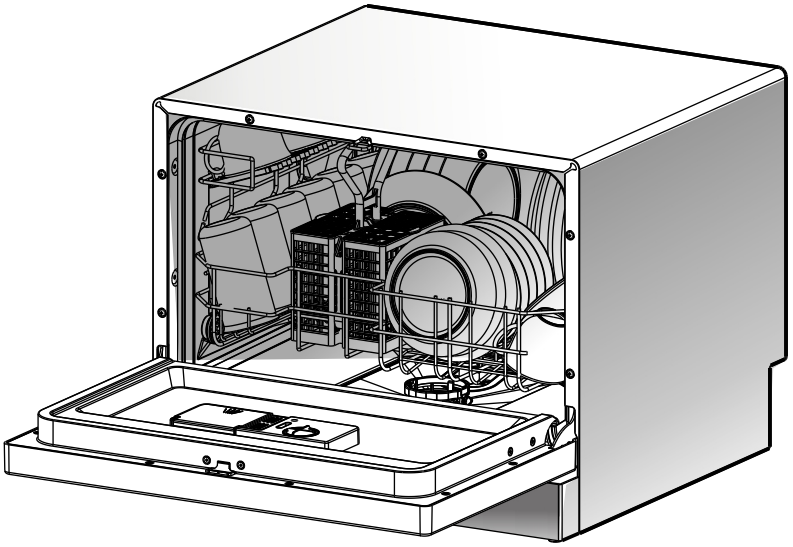

Read this Manual

Dear Customer,

- Please carefully reading it before using the dishwasher will help you to use and maintain the dishwasher properly.
- Keep it to refer to at a later date.
- Pass it on to any subsequent owner of the appliance.

This manual contains sections of Safety Instructions, Operating Instructions, Installation Instructions and Troubleshooting Tips, etc.

Before Calling for Service

- To review the section on Troubleshooting Tips will help you to solve some common problems by yourself.
- If you can not resolve the troubles by yourself, please ask for the help of professional technicians.

NOTE:

The manufacturer, following a policy of constant development and updating of the product, may make modifications without giving prior notice.

1) Safety Information.....1

2) Operating Instructions.....3
Control Panel.....3
Dishwasher Features.....3

3) Prior using for the first time.....4
A、Fill the Rinse Aid Dispenser.....4
B、Function of Detergent.....4

4) Loading the Dishwasher Basket.....6
Attention before or after loading the Dishwasher Baskets.....6
Loading the Basket.....7
Cutlery Basket.....8

5) Starting a washing programme.....9
Wash Cycle Table.....9
Turning on the Appliance.....9
Change the Programme.....10
At the End of the Wash Cycle.....10

6) Maintenance and cleaning.....11
Filtering System.....11
Caring for the Dishwasher.....12

7) Installation instruction.....13
Positioning the Appliance.....14
About Power Connection.....14
Water Connection.....14
Connection of Drain Hoses.....16
Start of dishwasher.....16

8) Troubleshooting Tips.....17
Before calling for service.....17
Error codes.....18
Technical information.....19

1.IMPORTANT SAFETY INFORMATION
READ ALL INSTRUCTIONS BEFORE USING

⚠ WARNING! When using your dishwasher, follow the precautions listed below:

GROUNDING INSTRUCTIONS

- This appliance must be grounded. In the event of a malfunction or breakdown, grounding will reduce the risk of electric shock by providing a path of least resistance of electric current. This appliance is equipped with a cord having an equipment-grounding conductor and a grounding plug.
- The plug must be plugged into an appropriate outlet that is installed and grounded in accordance with all local codes and ordinances.

⚠ WARNING!

- Improper connection of the equipment-grounding conductor can result in a risk of electric shock.
- Check with a qualified electrician or service representative if you are in doubt whether the appliance is properly grounded. Do not modify the plug provided with the appliance; If it is not fit for the outlet. Have a proper outlet installed by a qualified electrician.

WARNING! PROPER USE

- Do not abuse, sit on, or stand on the door or dish rack of the dishwasher.
- Do not touch the heating element during or immediately after use.
  (This instruction is only applicable to machines with a visual heating element.)
- Do not operate your dishwasher unless all enclosure panels are properly in place. Open the door very carefully if the dishwasher is operating, there is a risk of water squirting out.
- Do not place any heavy objects of stand on the door when it is open. The appliance could tip forward.
- When loading items to be washed:
  1) Locate sharp items so that they are not likely to damage the door seal;
  2) Warning: Knives and other utensils with sharp points must be loaded in the basket with their points down or placed in a horizontal position.
- When using your dishwasher, you should prevent plastic items from coming into contact with heating element.(This instruction is only applicable to machines with a visual heating element.)
- Check that the detergent receptible is empty after completion of the wash cycle.
- Do not wash plastic items unless they are marked dishwasher safe or the equivalent. For plastic items not so marked, check the manufacturer's recommendations.
- Use only detergent and rinse additives designed for an automatic dishwasher.
- Never use soap, laundry detergent, or hand washing detergent in your dishwasher. Keep these products out of the reach of children.
- Keep children away from detergent and rinse aid, keep children away from the open door of the dishwasher, there could still be some detergent left inside.
- This appliance is not intended for use by persons (including children)with reduced physical, sensory or mental capabilities, or lack of experience and knowledge ,unless they have been given supervision or instruction concerning use of the appliance by a person responsible for their safety.
- Children should be supervised to ensure that they do not play with the appliance.
- Dishwasher detergents are strongly alkaline, they can be extremely dangerous if swallowed. Avoid contact with skin and eyes and keep children away from the dishwasher when the door is open.
- The door should not be left in the open position since this could present a tripping hazards.
- If the supply cord is damaged, it must be replaced by the manufacturer or its service agent or a similarly qualified person in order to avoid a hazard.
- Remove the door to the washing compartment when removing an old dishwasher from service or discarding it.
- Please dispose of packing materials properly.
- Use the dishwasher only for its intended function.
- During installation, the power supply must not be excessively or dangerously bent or flattened. Do not tamper with controls.
- The appliance is to be connected to the water mains using new hose sets and that old hose-sets should not be reused.
- The maximum number of place settings to be washed is 6.
- The maximum permissible inlet water pressure is 1Mpa.
- The minimum permissible inlet water pressure is 0.04Mpa.

READ AND FOLLOW THIS SAFETY INFORMATION CAREFULLY
SAVE THESE INSTRUCTIONS

2.Operation Instruction

IMPORTANT *To get the best performance from your dishwasher, read all operating instructions before using it for the first time.*

Control Panel

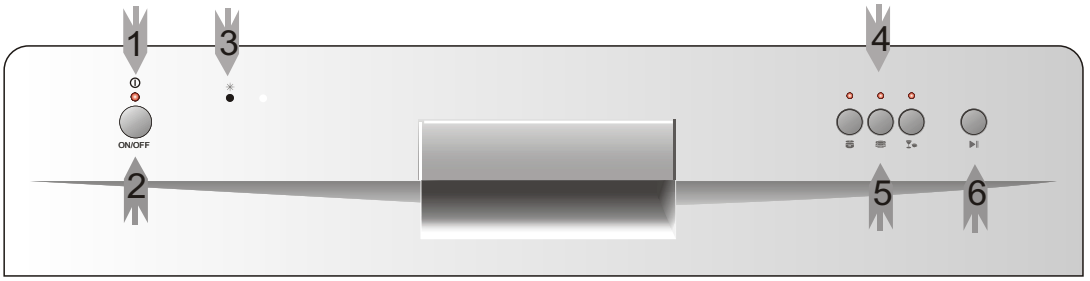

1 Power on light: To come on when Power ON/OFF button is pressed down.

2 ON/OFF Button: To turn on/off the power supply.

3 Rinse Aid Warning Light : To be on when the rinse aid dispenser needs to be refilled.

4 Program indicator light: when you select washing program, the correspond light will display.

5 Program indicator button: when you press washing program button, the correspond light will display.

6 Start/Reset Button: Press this button to start or pause the dishwasher, the process pilot lamp will be blinking when starting.

Dishwasher Features

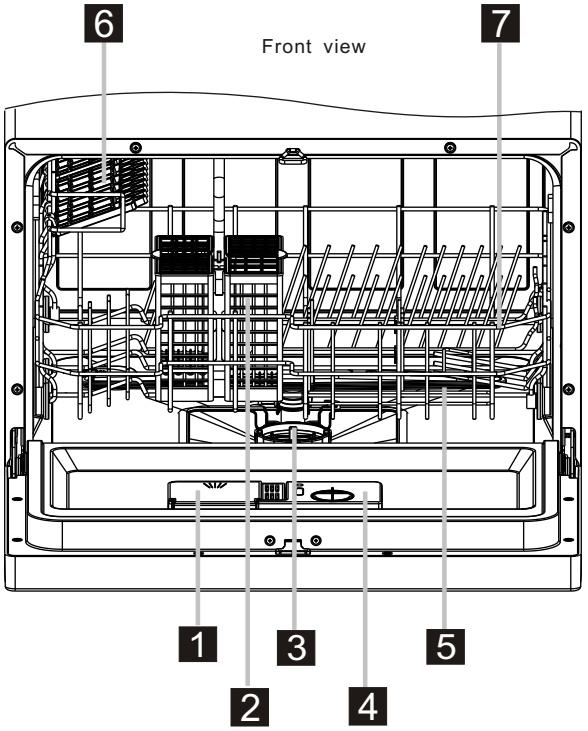

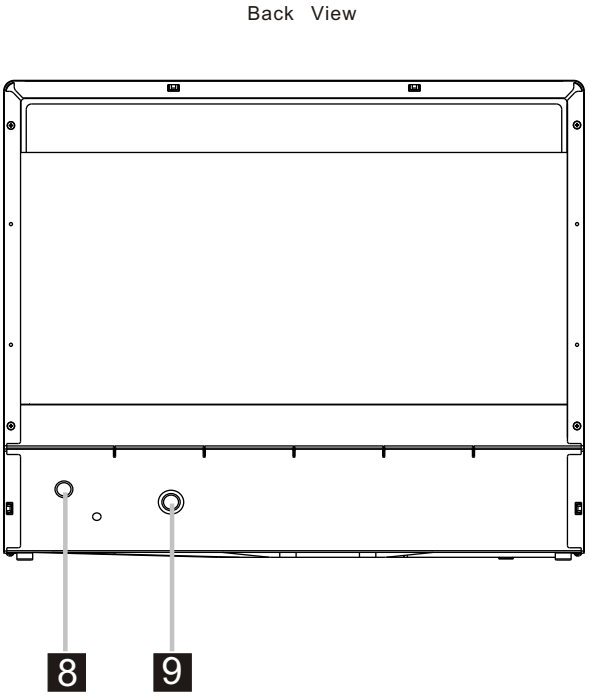

1 Detergent Dispenser
2 Cutlery Basket
3 Filter assembly
4 Rinse Aid Dispenser
5 Spray Arms
6 Cup Shelf
7 Basket
8 Drain pipe connector
9 Inlet pipe connector

3.Prior using for the first time

A. Fill the Rinse Aid Dispenser

Rinse Aid Dispenser

The rinse aid is released during the final rinse to prevent water from forming droplets on your dishes. That can leave spots and streaks. It also improves drying by allowing water to sheet off the dishes. Your dishwasher is designed to use liquid rinse aids. The rinse aid dispenser is located inside the door next to the detergent dispenser. To fill the dispenser, open the cap and pour the rinse aid into the dispenser until the level indicator turns completely black. The volume of the rinse aid container is about 110ml.

Function of Rinse Aid

Rinse aid is automatically added during the last rinse, ensuring thorough rinsing, and spot and streak free drying.

Attention!

Only use branded rinse aid for dishwasher. Never fill the rinse aid dispenser with any other substances (e.g. Dishwasher cleaning agent, liquid detergent). This would damage the appliance.

When to Refill the Rinse Aid Dispenser

If there is no rinse-aid warning light in the control panel, you can judge the amount of rinse-aid by the color of the optical level indicator "C" located next to the cap. When the rinse-aid container is full, the whole indicator will be dark .As the rinse-aid diminishes, the size of the dark dot decreases. You should never let the rinse aid get below 1 / 4 full.

C (Rinse-Aid indicator)

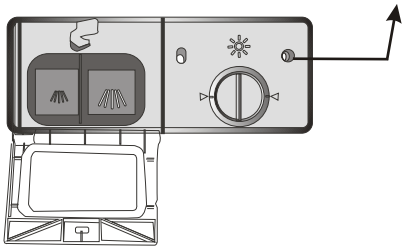

As the rinse aid diminishes, the size of the black dot on the rinse aid level indicator changes, as illustrated below.

- ● Full
- ◉ 3 / 4 full
- ◉ 1 / 2 full
- ⊙ 1 / 4 full - Should refill to eliminate spotting
- ○ Empty

1. To open the dispenser, turn the cap to the "open" (left) arrow and lift it out.
2. Pour the rinse aid into the dispenser, being careful not to overfill.
3. Replace the cap by inserting it aligned with "open" arrow and turning it to the closed (right) arrow.

NOTE: *Clean up any rinse aid split during filling with an absorbent cloth to avoid excessive foaming during the next wash.* Don't forget to replace the cap before you close dishwasher door.

Adjusting Rinse Aid Dispenser

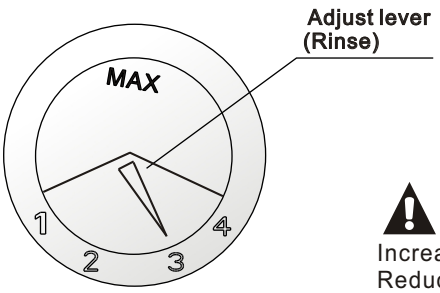

The rinse aid dispenser has four settings.The recommended setting is on "3". If the dishes still are not drying properly or are spotted, adjust the dial to the next higher number on "4".

NOTE:

Increase the dose if there are drops of water or lime spots on the dishes after washing. Reduce it if there are sticky whitish stains on your dishes or a bluish film on glassware or knife blades.

B. Function of Detergent

Proper Use of Detergent

Detergents with its chemical ingredients are necessary to remove dirt, crush dirt and transport it out of the dishwasher. Use only detergent specifically made for use in dishwashers. Keep your detergent fresh and dry.
Don't put powder detergent into the dispenser until you're ready to wash dishes.

Detergents

There are 3 sorts of detergents

1.With phosphate and with chlorine
2.With phosphate and without chlorine
3.Without phosphate and without chloride

Normally new pulverised detergent is without phosphate. The water softener function of phosphate is not given. In this case we recommend to fill salt in the salt container even when the hardness of water is only 6 ° dH. If detergents without phosphate were used in case of hard water often white spots appear at dishes and glasses. In this case please add more detergent to reach better results. Detergents without chlorine do only bleach a little. Strong and coloured spots will not removed completely. In this case please choose a programme with higher Temperature.

Concentrated Detergent

Based on their chemical composition, dishwasher can be split in two basic types:

- conventional, alkaline detergents with caustic components
- low alkaline concentrated detergents with natural enzymes

The use of "normal" washing programmes in conjunction with concentrated detergents reduces pollution and is good for your dishes; these wash programmes are specially matched to the dirt-dissolving properties of the enzymes of the concentrated detergent. For this reason "normal" wash programmes in which concentrated detergents are used can achieve the same results that can otherwise only be achieved using "heavy" program.

Detergent Tablets

Detergent tablets of different brands dissolve at different speeds. For this reason some detergent tablets cannot dissolve and develop their full cleaning power during short programmes. Therefore please use long programmes when using detergent tablets, to ensure the complete removal of detergent residuals.

NOTE: Detergent tablets are only for the models with 3 in 1 function or 3 in 1 program.

Detergent Dispenser

The dispenser must be refilled before the start of each wash cycle following the instructions provided in the Wash Cycle Table . Your dishwasher uses less detergent and rinse aid then conventional dishwasher. Generally, only one tablespoon of detergent is needed for a normal wash load. Also, more heavily soiled items need more detergent. Always add the detergent just before starting the dishwasher, otherwise it could get damp and will not dissolve properly.

Amount of Detergent to Use

1

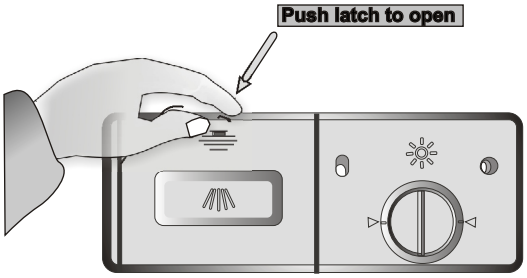

2

Detergent powder

Detergent tablet

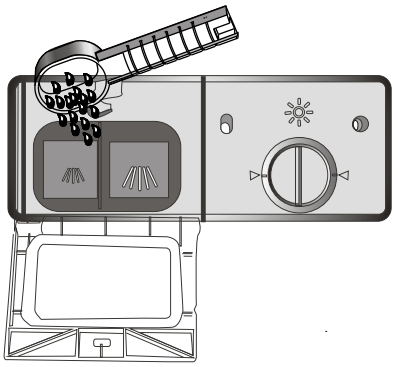

NOTE:

- If the lid is closed: press release button. The lid springs open.
- Always add the detergent just before starting each wash cycle.
- Only use branded detergent aid for dishwasher.

WARNING! Dishwasher detergent is corrosive! Take care to keep it out of reach of children.

Fill in detergent

Fill the detergent dispenser with detergent.
The marking indicates the dosing levels , as illustrated on right:

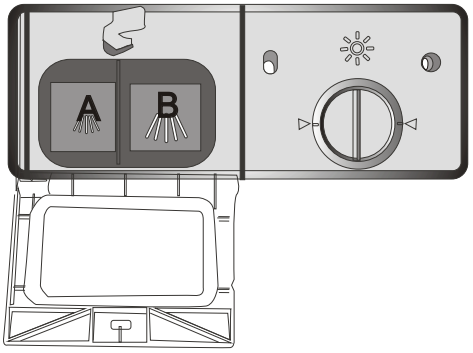

A The place can load 15g detergent .

B The place can load 25g detergent .

Please observe the manufacturers dosing and storage Recommendations as stated on the detergent packaging.

Close the lid and press until it locks in place.

If the dishes are heavily soiled, place an additional detergent dose in the pre-wash detergent chamber. This detergent will take effect during the pre-wash phase.

NOTE:

- You find information about the amount of detergent for the single programme on the last page.
- Please aware, that according to the level soiling and the specific hardness of water differences are possible.
- Please observe the manufacturer's recommendations on the detergent packaging.

4.Loading the Dishwasher Baskets

Recommendation

- Consider buying utensils which are identified as dishwasher-proof.
- Use a mild detergent that is described as 'kind of dishes'. If necessary, seek further information from detergent manufacturers.
- For particular items, select a programme with as low a temperature.
- To prevent damage, do not take glass and cutlery out of the dishwasher immediately after the programme has ended.

For washing in the dishwasher the following cutlery/dishes

Are not suitable

- Cutlery with wooden, horn china or mother-of-pearl handles
- Plastic items that are not heat resistant
- Older cutlery with glued parts that is not temperature resistant
- Bonded cutlery items or dishes
- Pewter or cooper items
- crystal glass
- Steel items subject to rusting
- Wooden platters
- Items made from synthetic fibres

Are of limited suitability

- Some types of glasses can become dull after a large number of washes
- Silver and aluminium parts have a tendency to discolour during washing
- Glazed patterns may fade if machine washed frequently

Attention before or after loading the Dishwasher Baskets

(For best performance of the dishwasher, follow these loading guidelines.
Features and appearance of baskets and cutlery baskets may vary from your model.)

Scrape off any large amounts of leftover food. Soften remnants of burnt food in pans
It is not necessary to rinse the dishes under running water.
Place objects in the dishwasher in following way:
1.Items such as cups, glasses, pots/pans, etc. are face down.
2.Curved items, or those with recesses, should be loaded at a slant so that water can run off.
3.All utensils are stacked securely and can not tip over.
4.All utensils are placed in the way that the spray arms can rotated freely during washing.

NOTE: Very small items should not be washed in the dishwasher as they could easily fall out of the basket.

- Load hollow items such as cups, glasses, pans etc. With the opening downwards so that water cannot collect in the container or a deep base.
- Dishes and items of cutlery must not lie inside one another, or cover each other.
- To avoid damage to glasses, they must not touch.
- Load large items which are most difficult to clean into the basket.
- Long bladed knives stored in an upright position are a potential hazard!
- Long and/or sharp items of cutlery such as carving knives must be positioned horizontally in the basket.
- Please do not overload your dishwasher. This is important for good results and for reasonable energy consume.

餐具摆放图和碗篮图片修改

Loading the Basket

Position the dishes and cookware so that they will not get moved by the spray of water.

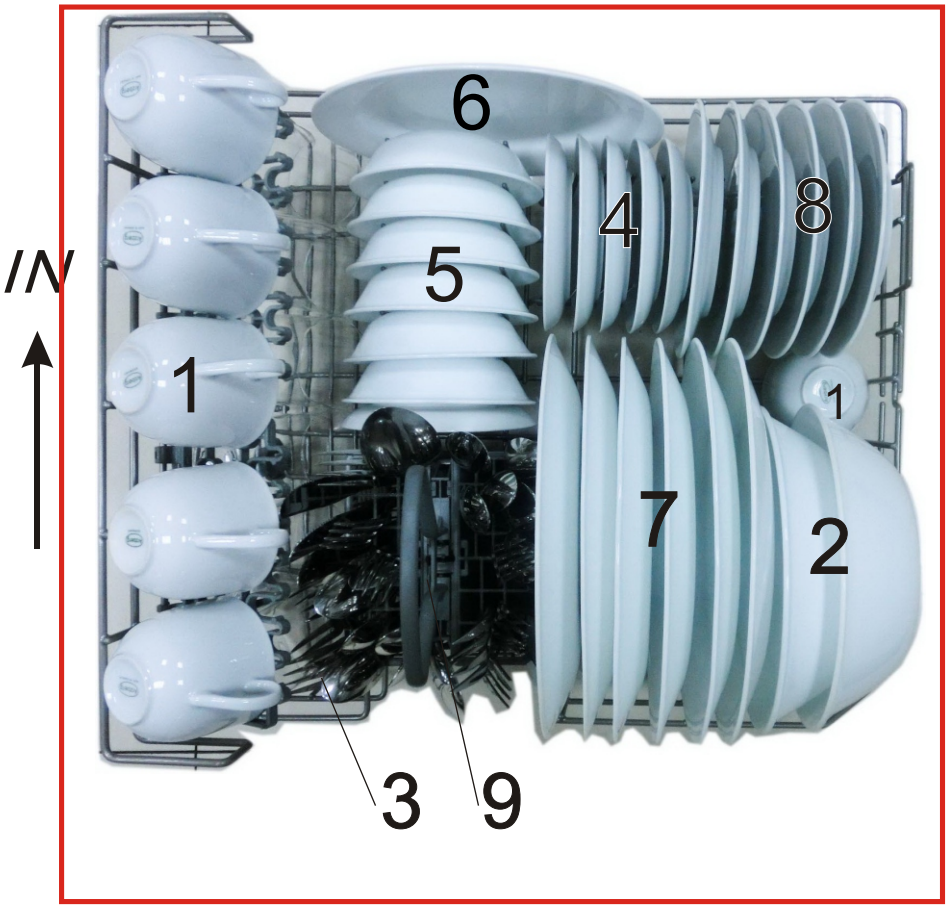

1 Cups	2 Serving bowl
3 Glasses	4 Saucers
5 Fruit bowl	6 Oval platter
7 Dinner plates	8 Bread and butter plates
9 Cutlery basket	

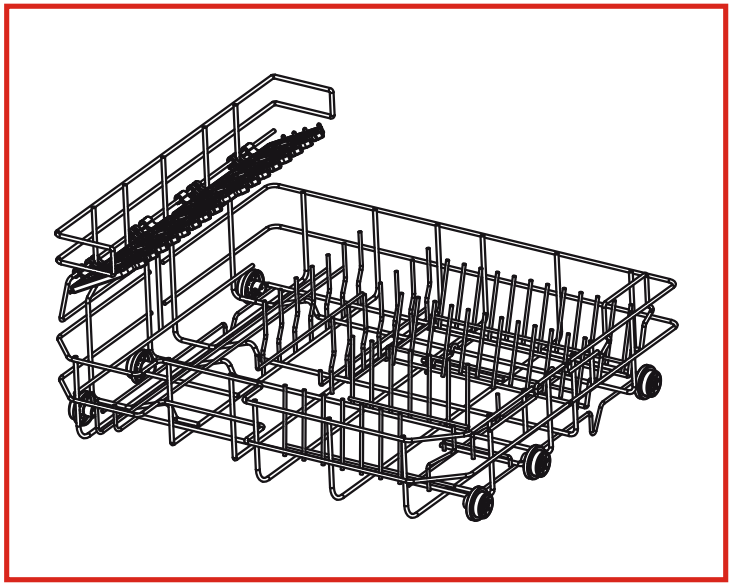

Plate racks of Basket

The basket is fitted with plate racks which can be stowed horizontal if required.

Teaspoons 数量12，部分说明书中标14个,按此份图修改

Cutlery Basket

Cutlery should be placed in the cutlery basket with handles at the bottom. If the rack has side baskets, the spoon should be loaded individually into the appropriate slots, especially long utensils should be placed in the horizontal position at the front of the upper basket as shown.

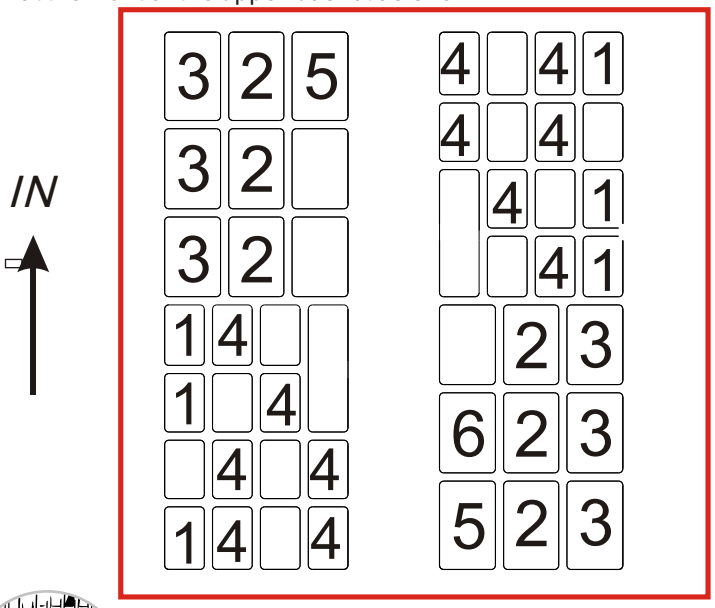

1 Dinner forks

2 Salad forks

3 Knives

4 Teaspoons

5 Serving spoons

6 Serving forks

⚠ WARNING!

- Do not let any item extend through bottom.
- Always load sharp utensils with the sharp point down!

For personal safety and a top quality clean, place the silverware in the basket:

- **They do not nest together.**
- **Place silverware with handles-down.**
- **But place knives and other potentially dangerous utensils handles-up.**

5.Starting a washing programme

Wash Cycle Table

NOTE:

- (★) *Means: need to fill rinse into the Rinse-Aid Dispenser.*
- **AHAM DW-1-2005 : This program is the test cycle, the rinse-aid dispenser setting is recommended to Position 3.*

Program	Cycle Selection Information	Description of Cycle	Detergent pre/main	Running time(min)	Energy (Kwh)	Water (l)	Rinse Aid
Heavy	For the heaviest soiled loads, such as pots,pans,casserole dishes and dishes that have been sitting with dried food on them for a while.	Pre-wash Pre-wash(50℃) Wash (55 ℃) Wash (50 ℃) Rinse Rinse (65 ℃) Drying	18g	100	0.424	14.5	★
Normal (*AHAM DW-1-2005)	For normally soiled loads, such as pots, plates,glasses and lightly soiled pans. standard daily cycle.	Pre-wash Pre-wash Wash (55 ℃) Rinse Rinse (65 ℃) Drying	18g	85	0.361	12	★
Speed	A shorter wash for lightly soiled loads that do not need drying.	Pre-wash Pre-wash(50 ℃) Wash (50 ℃) Rinse Rinse(55 ℃)	15 g.	45	0.233	12	

Turning On the Appliance

Starting a wash cycle...

1. Draw out the basket(see the section entitled "Loading the Dishwasher");
2. Pour in the detergent (see the section entitled "Salt, Detergent and Rinse Aid");
3. Insert the plug into the socket. The power supply is 120V/60Hz;
4. Make sure that the water supply is turned on to full pressure;
5. Close the door and press the on/off button To turn on the power supply;
6. Press the program button to select wash program you need

   Heavy->Normal->Speed

7. Then press the Start/Reset button, the dishwasher begins to start.

NOTE:

When you press the Start/Reset button to pause during washing, the program light will stop blinking and the dishwasher will mooing every minute unless you press the Start/Reset button to start.

Change the Programme...

Premise: You can modify the washing program, When the dishwasher just runs for a short time. Otherwise, the detergent may have already been released, and the appliance may have already drained the wash water. If this is the case, the detergent dispenser must be refilled (see the section entitled " Loading the Detergent ").

To chang the washing program, press the start/reset button to pause the working program, then press the program button more than 3 seconds which you need, the washing resume

The lights show the state of the dishwasher:
a) All Program indicator lights off----------On stand by
b) One of the Program indicator lights on----------Being paused
c) One of the Program indicator light blinking----------Running

NOTE: *If you open the door when washing, the machine will pause. When you close the door , the machine will keep on working after 10 seconds*

Forget to Add a Dish?

A forgotten dish can be added any time before the detergent cup opens.

1. Press the start/reset button
2. Open the door a little to stop the washing.
3. After the spray arms stop working,you can open the door completely.
4. Add forgotten dishes.
5. Close the door
6. Press the start/reset button, the dishwasher will run after 10 seconds.

At the End of the Wash Cycle

When the working cycle has finished, the buzzer of dishwasher will sound 8 seconds, then stop. Turn off the appliance using the ON/OFF button, shut off the water supply and open the door of the dishwasher. Wait a few minutes before unloading the dishwasher to avoid handling the dishes and utensils while they are still hot and more susceptible to breakage. They will also dry better.

■ Switch Off the Dishwasher

All the phase lights are off , only in this case the programme has ended.
1.Switch off the dishwasher by pressing the ON/OFF button.
2.Turn off the water tap!

■ Open the door carefully.

Hot dishes are sensitive to knocks. The dishes should therefore be allowed to cool down around 15 minutes before removing from the appliance.
Open the dishwasher's door, leave it ajar and wait a few minutes before removing the dishes. In this way they will be cooler and the drying will be improved.

■ Unloading the dishwasher

It is normal that the dishwasher is wet inside.

⚠ WARNING! It is dangerous to open the door when washing, because the hot water may scald you.

6.Maintenance and Cleaning

Filtering System

The filter prevent larger remnants of food or other objects from getting inside the pump.

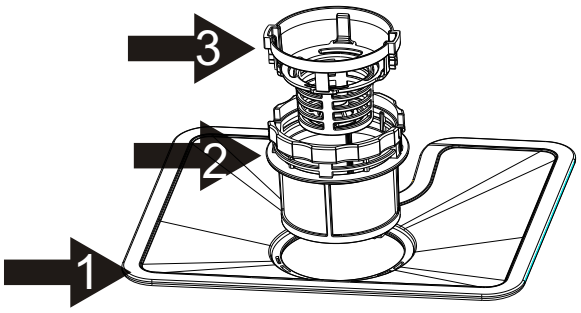

The filter system consists of a coarse filter, a flat (Main filter) and a micro filter (fine filter).

Main filter 1

Food and soil particles trapped by this filter are pulverized by a special jet on the spray arm and washed down to drain.

Fine filter 2

This filter holds soil and food residue in the sump area and prevents it from being redeposit on the dishes during wash cycle.

Coarse filter 3

Larger items, such as pieces of bone or glass, that could block the drain are trapped in the coarse filter. To remove the items caught by the filter, gently squeeze the tap on the top of this filter and lift out.

Filter assembly

The filter efficiently removes food particles from the wash water, allowing it to be re-cyclated during the cycle. For best performance and results, the filter assembly must be regularly. For this reason, it is a good idea to remove the larger food particles trapping in the filter after each wash cycle by rinsing the filter and cup under running water. To remove the filter assembly, pull on the cup handle in the upward direction.

⚠ WARNING!

- Never run the dishwasher without the filters in place.
- The dishwasher must never be used without the filters.
- Improper replacement of the filter may reduce the performance level of the appliance and damage dishes and utensils.

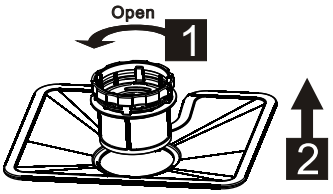

Step 1 : contrarotate the Fine filter,

Step2: lift it up;

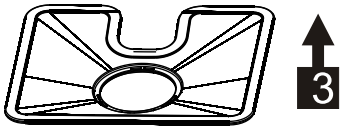

Step3: lift the Main filter up

NOTE: *If do it from step1 to step 3, the filter system will be removed; Reverse operate by placing the main filter ,then screw up the fine filter to finish installation*

Remarks:

- Inspect the filters for blocking every time the dishwasher has been used.
- By unscrewing the coarse filter.you can remove the filter system.Remove any food remnants and clean the filters under running water.

NOTE: The entire filter assembly should be cleaned once a week.

Cleaning The Filter

To clean the coarse filter and the fine filter, use a cleaning brush. Reassemble the filter parts as shown in the figures in the last page and reinsert the entire assembly in the dishwasher, positioning in its seat and pressing downward.

WARNING! When cleaning the filters, don't knock on them. Otherwise, the filters could be contorted and the performance of dishwasher could be debased.

Caring for the Dishwasher

The control panel can be cleaned by using a lightly dampened cloth and dry thoroughly.

The exterior use a good appliance polish wax.

Never use sharp objects, scouring pads or harsh cleaners on any part of the dishwasher.

Cleaning The Door

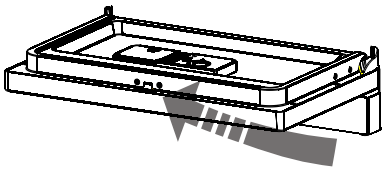

To clean the edge around the door, you should use only a soft warm, damp cloth. To avoid penetration of water into the door lock and electrical components, do not use a spray cleaner of any kind.

WARNING!

- Never use a spray cleaner to clean the door panel as it may damage the door lock and electrical components.
- Abrasive agent or some paper towel should not be used because of the risk of scratching or leaving spots on the stainless steel surface.

Protect Against Freezing

please take frost protection measures on dishwasher in winter. Each time after washing cycles, please operate as follows:

1. Cut off electrical power to the dishwasher.
2. Turn off the water supply and disconnect the water inlet pipe from the water valve.
3. Drain water from the inlet pipe and water valve. (Use a pan to catch the water)
4. Reconnect the water inlet pipe to the water valve.
5. Remove the filter at the bottom of the tub and use a sponge to use up water in sump.

NOTE: *If your dishwasher cannot work because of the ice, please contact professional service persons.*

Cleaning the Spray Arms

The spray arms can be easily removed for periodic cleaning of the nozzles, to prevent possible clogging. Wash them under running water and carefully replace them in their seats, checking that their rotary movement is in no way impeded.

Grasp the middle of the spray arm, pull it upwards to remove it. Wash the arms under a jet of running water and return them carefully to their seat. After reassembly, check that the spray arms turn freely. Otherwise, check that they have been installed correctly.

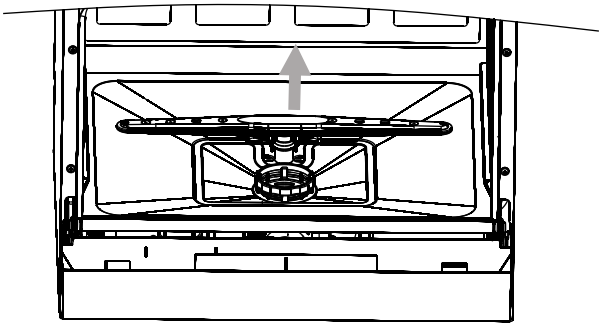

How to Keep Your Dishwasher in Shape

■ After Every Wash

After every wash, turn off the water supply to the appliance and leave the door slightly open so that moisture and odors are not trapped inside.

■ Remove the Plug

Before cleaning or performing maintenance, always remove the plug from the socket.

■ No Solvents or Abrasive Cleaning

To clean the exterior and rubber parts of the dishwasher, do not use solvents or abrasive cleaning products. Only use a cloth with warm soapy water.
To remove spots or stains from the surface of the interior, use a cloth dampened with water with a little vinegar, or a cleaning product made specifically for dishwashers.

■ When it is not in need for a long time

It is recommend that you run a wash cycle with the dishwasher empty and then remove the plug from the socket, turn off the water supply and leave the door of the appliance slightly open. This will help the door seals to ast longer and prevent odours from forming within the appliance.

■ Moving the Appliance

If the appliance must be moved, try to keep it in the vertical position. If absolutely necessary, it can be positioned on its back.

■ Seals

One of the factors that cause odors to form in the dishwasher is food that remains trapped in the seals. Periodic cleaning with a damp sponge will prevent this from occurring.

7.Installation instruction

⚠ *Attention:*

The installation of the pipes and electrical equipments should be done by professionals.

⚠ *Warning*

Electrical Shock Hazard
Disconnect electrical power before installing dishwasher.

Failure to do so can result in death or electrical shock.

Installation preparation

The installation position of dishwasher should be near the existing inlet and drain hoses and power cord.
One side of the cabinet sink should be chosen to facilitate the connection of drain hoses of the dishwasher.

Positioning the Appliance

Position the appliance in the desired location. The back should rest against the wall behind it, and the sides, along the adjacent cabinets or wall. The dishwasher is equipped with water supply and drain hoses that can be positioned to the right or the left to facilitate proper installation.

About Power Connection

⚠ WARNING!

For personal safety:

- DO NOT USE AN EXTENSION CORD OR AN ADAPTER PLUG WITH THIS APPLIANCE.
- DO NOT, UNDER ANY CIRCUMSTANCES, CUT OR REMOVE THE EARTHING CONNECTION FROM THE POWER CORD.

Electrical Requirements

Please look at the rating label to know the rating voltage and connect the dishwasher to the appropriate power supply. Use the required fuse 10 amp, time delay fuse or circuit breaker recommended and provide separate circuit serving only this appliance.

Electrical Connection

⚠ Insure proper ground exists before use

Ensure the voltage and frequency of the power being corresponds to those on the rating plate. Only insert the plug into an electrical socket which is earthed properly. If the electrical socket to which the appliance must be connected is not appropriate for the plug , replace the socket, rather than using a adaptors or the like as they could cause overheating and burns.

GROUNDING INSTRUCTIONS

- This appliance must be earthed. In the event of a malfunction or breakdown, earthing will reduce the risk of electric shock by providing a path of least resistance for the electric current. This appliance is equipped with a cord having an equipment-earthing conductor and an earthing plug. The plug must be plugged into an appropriate outlet that is installed and earthed in accordance with all local standards and requirements.

⚠ WARNING!

- Improper connection of the equipment earthing conductor can result in the risk of an electric shock.
- Check with a qualified electrician or service representative if you are in doubt whether the appliance is properly earthed.
- Do not modify the plug provided with the appliance. If the plug does not fit properly to the outlet, please have a qualified electrician to install a proper outlet.

Water Connection

Back View

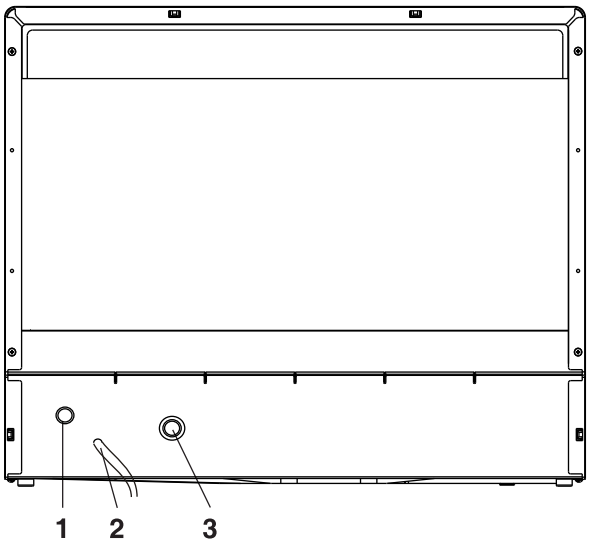

Rear of Dishwasher:
1. Drain Port
2. Power Cord
3. Inlet Port

Your dishwasher comes equipped with a 'quick connect' assembly (includes inlet and drain hose). The faucet adapter must be installed on the faucet before you can connect the dishwasher. This adapter is included inside your dishwasher. The faucet adapter is compatible with faucets inclusive of either male (outside) or female (inside) threaded faucet connections.

Quick Connect Assembly

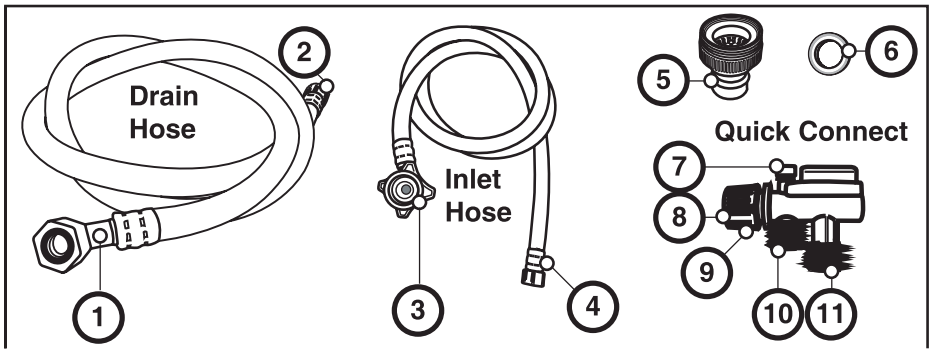

Quick Connect Assembly
Drain Hose:
1. Drain port connection
2. Quick connect connection

Inlet Hose:
3. Inlet port connection
4. Quick connect connection

Faucet Adapter:
5. Faucet Adapter
6. Faucet washer

Quick Connect:
7. Pressure relief valve
8. Faucet adapter connection
9. Locking collar
10. Inlet hose connection
11. Drain hose connection

⚠ WARNING!

In order to avoid that there is more water staying in the inlet hose, please close the faucet after using.

1. Screw the faucet adapter onto (or into) the faucet tap. Check for leaks (use Teflon tape to eliminate if necessary).
2. Connect the six-sided connection of the drain hose to the drain port connection on the back of the dishwasher cabinet. Do not over-tighten (to avoid damage to threads).
3.Connect the star-shaped connection of the inlet hose to the inlet port on the back of the dishwasher cabinet. Do not over-tighten (to avoid damage to threads).
4.Connect the circular connection of the drain hose onto the longer (bottom) male connection on the quick connect.
5.Connect the circular connection of the inlet hose onto the shorter (top) male connection on the quick connect.
6.Attach the quick connect onto the faucet adapter, by pulling down the outer locking collar on the quick connect, while pushing the quick connect upward onto the faucet adapter.
7.When the quick connect snaps onto the faucet adapter, release the locking collar. Verify the connection is secure.
8. Slowly open the hot water line and check for any sign of water leaks at all hose connections. If leaks are located, immediately close the water supply and repair the hose connections.

Important

1. Once you open the water supply line, (even if it is closed immediately thereafter), the inlet hose will be pressurized.
2. To relieve water pressure from inside the inlet hose, (make sure the water line (faucet) is closed): press and hold the red pressure relief button on the quick connect until the flow of water stops.

WARNING

FAILURE TO RELIEVE WATER PRESSURE, BEFORE DISCONNECTING THE QUICK-CONNECT FROM THE FAUCET, WILL RESULT IN BACK-PRESSURE OVER-SPRAY. THE TEMPERATURE OF INCOMINGWATER CAN BE VERY HOT, AND BACK-PRESSURE OVER-SPRAY COULD CAUSE SEVERE BURNS AND/OR SCALDING.

DANGER

DO NOT LET CHILDREN DISCONNECT THE DISHWASHER; CLOSE SUPERVISION OF CHILDREN IS ALWAYS IMPORTANT AROUND APPLIANCES.

NOTE:
Hard water conditions will adversely affect the washing performance of your dishwasher. Hard water conditions will also contribute to 'lime' (white film substance) deposits and/or 'scaling' on the stainless steel surface of the dishwasher tub and heater element, located in the sump underneath the removable filter screen. To assist in minimizing these conditions, it is recommended to periodically operate/rinse the inside of the dishwasher (empty) using 1 cup of white vinegar at least once a week.

Disconnecting your Dishwasher

1.Shut off the water supply at the faucet.
2.Disconnect the power supply cord

Start of dishwasher

The following things should be checked before starting the dishwasher.

1. The dishwasher is level and fixed properly
2. The inlet valve is open
3. There is a leakage at the connections of the conducts
4. The wires are tightly connected
5. The power is switched on
6. The inlet and drain hoses are knotted
7. All packing materials and printings should be taken out from the dishwasher

Attention: *After installation, please make sure to keep this manual.*
The content of this manual is very helpful to the users.

8.Troubleshooting Tips

Before Calling for Service

Review the charts on the following pages may save you from calling for service.

	Problem	Possible Causes	What To Do
Technical problems	*Dishwasher doesn't start*	Fuse blown, or the circuit breaker tripped.	Replace fuse or reset circuit breaker. Remove any other appliances sharing the same circuit with the dishwasher
		Power supply is not turned on.	Make sure the dishwasher is turned on and the door is closed securely. Make sure the power cord is properly plugged into the wall socket.
		Door of dishwasher not properly closed.	Closed dishwasher making sure that door latches.
	Water not pumped form dishwasher	Kink in drain hose	Check drain hose.
		Filter clogged.	Check coarse the filter. (see section titled " Cleaning The Filter ")
		Kitchen sink clogged.	Check kitchen sink to make sure it is draining well. If problem is kitchen sink not draining ,you may need a plumber rather than a serviceman for dishwasher.
General problems	*Suds in the tub*	Improper detergent	Use only the special dishwasher detergent to avoid suds. If this occurs, open the dishwasher and let suds evaporate. Add 1 gallon of cold water to the tub. Close and latch the dishwasher, then Start the "soak" wash cycle to drain out the water . Repeat if necessary.
		Spilled rinse-aid	Always wipe up rinse-aid spills immediately.
	Stained tub interior	Detergent with colourant was used.	Make sure that the detergent is the one without colourant.
	White film on inside surface	Hard water minerals	To clean the interior, use a damp sponge with dishwasher detergent and wear rubber gloves. Never use any other cleaner than dishwasher detergent for the risk of foaming or suds.
	There are rust stains on cutlery	The affected items are not corrosion resistant.	
		A programme was not run after dishwasher salt was added. Traces of salt have got into the wash cycle.	Always run the Quick wash programme . without any crockery in the dishwasher and without selecting the Turbo function (if present), after adding dishwasher salt.
		The lid of softer is loose.	Check the lip .Ensure the fix is fine.
Noise	*Knocking noise in the wash cabinet*	The spray arm is knocking against an item in a basket.	Interrupt the programme, and rearrange the items which are obstructing the spray arm.
	Rattling noise in the wash cabinet	Item of crockery are insecure in the wash cabinet.	Interrupt the programme, and rearrange the items of crockery.
	Knocking noise in the water pipes	This may be caused by on-site installation or the cross-section of the piping.	This has no influence on dishwasher function. if in doubt, contact a suitably qualified plumber.

	Problem	Possible Causes	What To Do
Unsatis -factory washing result	*The dishes are not clean*	The dishes were not loaded correctly.	See notes in " Loading the Dishwasher Baskets ".
		The programme was not powerful enough.	Select a more intensive programme. See" Wash Cycle Table ".
		Not enough detergent was dispensed.	Use more detergent, or change your detergent.
		Item are blocking the path of spray arms.	Rearrange the items so that the spray can rotate freely.
		The filter combination in the base of wash cabinet is not clean or is not correctly fitted. This may cause the spray arm jets to get blocked.	Clean and/or fit the filter combination correctly. Clean the spray arm jets. See "Cleaning the Spray Arms".
	Cloudiness on glassware	Combination of soft water and too much detergent.	Use less detergent if you have soft water and select a shortest cycle to wash the glassware and to get them clean.
	Black or gray marks on dishes	Aluminum utensils have rubbed against dishes.	Use a mild abrasive cleaner to eliminate those marks.
	Detergent left in dispenser cups	Dishes block detergent cups.	Re-loading the dishes properly.
Unsatis -factory drying result	*The dishes are not drying*	Improper loading	Load the dishwasher as suggested in the directions.
		Too little rinse-aid	Increase the amount of rinse-aid/Refill the rinse-aid dispenser.
		Dishes are removed too soon.	Do not empty your dishwasher immediately after washing. Open the door slightly so that the steam can escape. Begin unloading the dishwasher only once t he dishes are barely warm to the touch. Empty the low basket first. This prevents water form dropping off dishes in the upper basket.
		Wrong programme selection	In short programmes the washing temperature is lower. This also lowers cleaning performance. Choose a programme with a long washing time.
		Using cutlery with a low-quality coating	Water drainage is more difficult with these items. Cutlery or dishes of this type are not suitable for washing in the dishwasher.

Error Codes

When some malfunctions come on, the appliance will display error codes to warn you:

Codes	*Meanings*	*Possible Causes*
The speed light flicker fleetly	Longer inlet time.	Faucets is not opened, or water intake is restricted, or water pressure is too low.
The normal light flicker fleetly	Overflow.	Some element of dishwasher leaks .

⚠ WARNING!

If overflow occurs, turn off the main water supply before calling a service. If there is water in the base pan because of an overfill or small leak, the water should be removed before restarting the dishwasher.

Technical Information

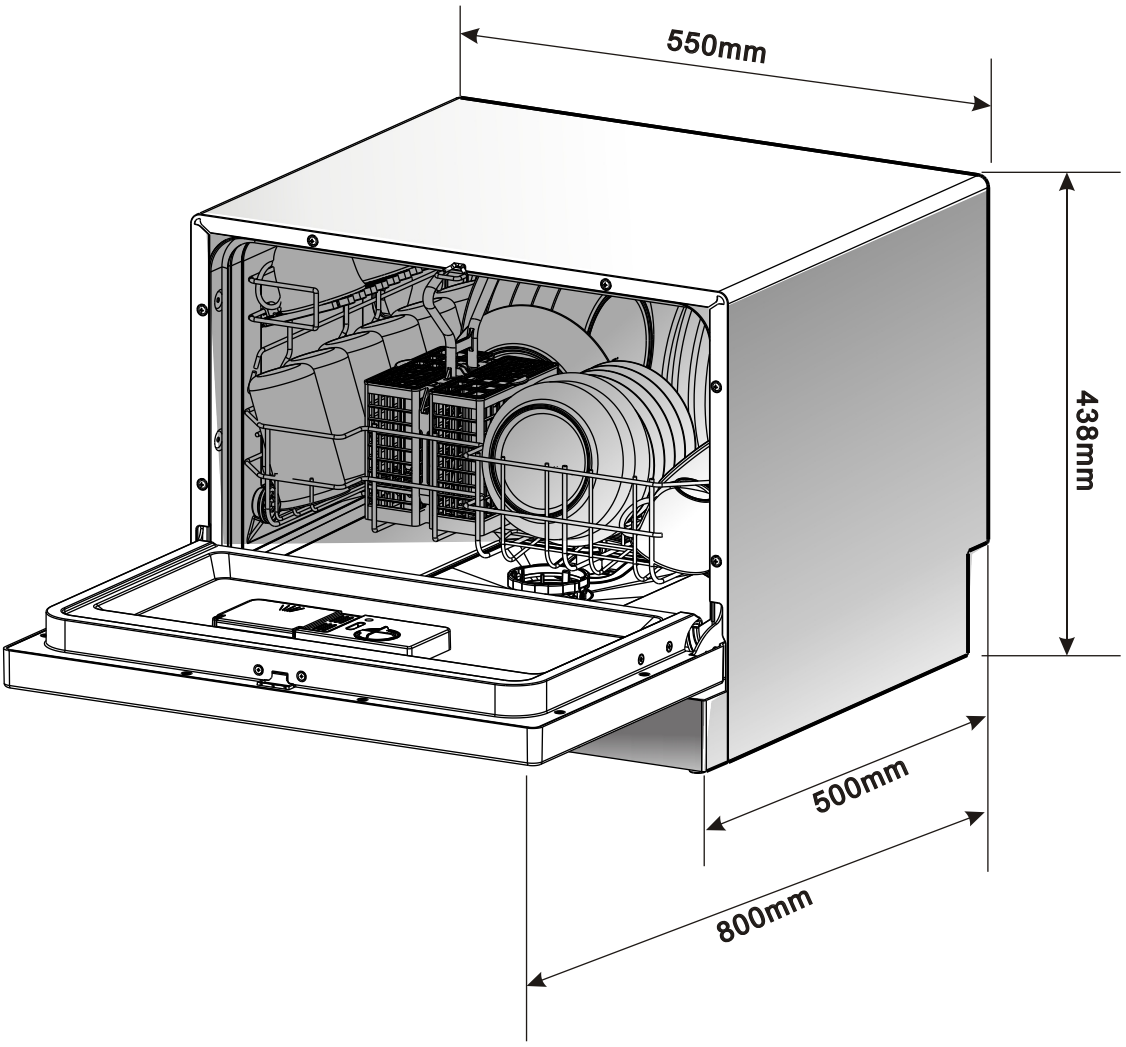

Height :	438mm
Width :	550mm
Depth :	500mm
Voltage connected Load :	see rating label
Water pressure:	0.04-1.0MPa
Hot water connection :	max 60 ℃
Power supply:	see rating label
Capacity:	6 Place settings